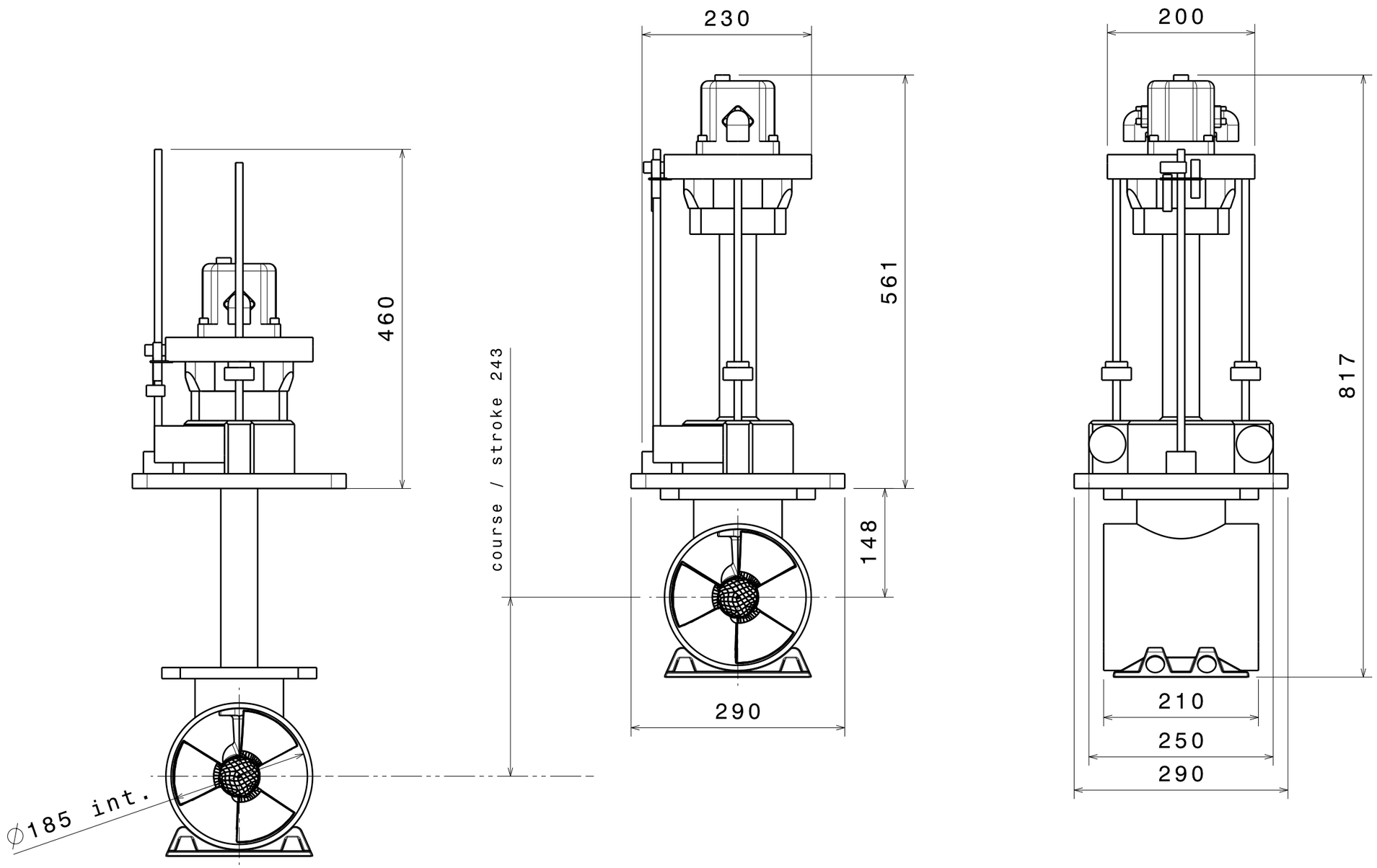

EN CAS DE DOUTE, MERCI DE NOUS CONTACTER
IN CASE OF DOUBT, PLEASE ASK

NOTA :
Dimensions exprimées en mm
Profondeur minimale d'immersion : un diamètre de turbine sous la ligne de flottaison
! Attention aux modifications d'échelles lors de l'impression !

NOTES :
Dimensions in mm
Minimal immersion depth : one turbine diameter under the waterline
! Be careful to scales modifications when printing !

This drawing is our property. It can't be reproduced or communicated without our written agreement.

DRAWN BY PBE	DATE	MAX POWER			
		DRAWING TITLE 317702&317703-VIP 150 HYD 12&24V general dimensions			
CHECKED BY XXX	DATE xxx	SIZE A3	DRAWING NUMBER XXX		REV A
DESIGNED BY XXX	DATE xxx	SCALE 1:6	WEIGHT(kg) 28		SHEET 1/1